INSTALLATION INSTRUCTIONS

FIXTURE TYPE_____

P-ID-9000 SYSTEM CONNECTORS

PART NO. 510250-3000

PG. 1 OF 1

DO NOT MODIFY OR ALTER THIS PRODUCT IN ANY WAY, OR INSTALL IN ANY FASHION WHICH IS CONTRARY TO THE INSTRUCTIONS CONTAINED HEREIN.
IF YOU HAVE ANY QUESTIONS REGARDING THIS PRODUCT OR THE INSTALLATION OF IT, PLEASE CALL LITECONTROL ENGINEERING AT 781-294-0100

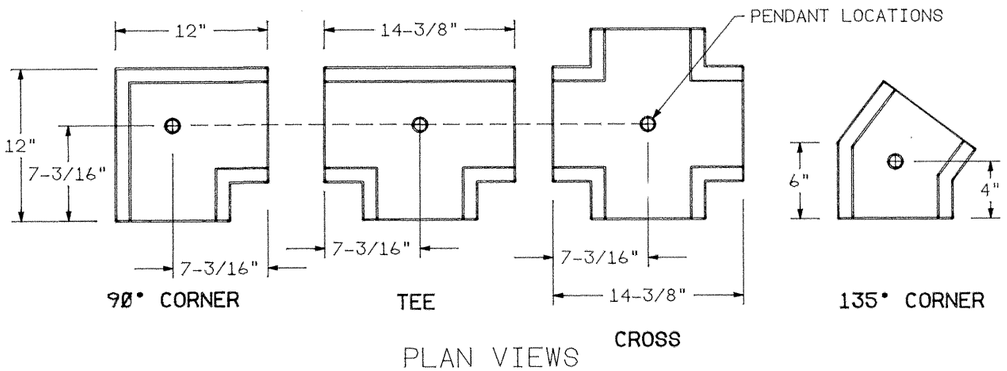

PLAN VIEWS

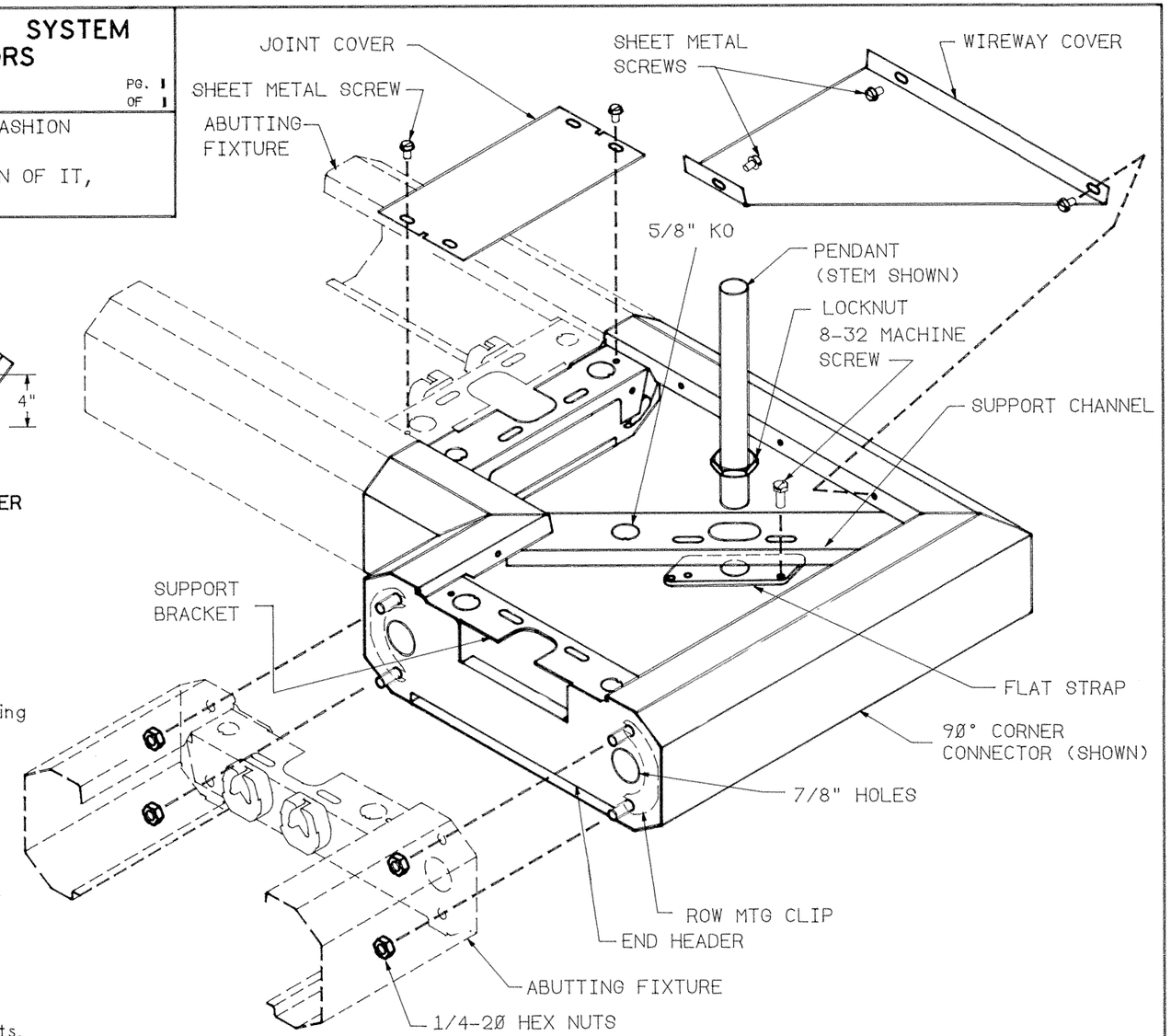

GENERAL NOTES:

1) This instruction sheet is used with fixture instruction sheet 510249.
2) Although the 90° corner is shown on this sheet, installation of all the system connectors is similar.
3) Litecontrol recommends that a system connector be assembled to an abutting fixture before attaching pendants.

Instructions:

1. Lift out wireway covers by removing sheet metal screws.
2. Mount a flat strap underneath the support channel with (1) 8-32 x 3/8" long hex head machine screw.
   Remove a 5/8" KO in support channel for wire feed if aircraft cables are being used to hang connector. Feed may be run inside stem if used.
3. Locate pendants in ceiling using the plan views on this sheet and the fixture instruction sheet 510249.
4. Loosely attach connector to abutting fixture with (2) Row Mounting Clips inserted thru the end header holes and secured with (4) 1/4-20 hex nuts. Tighten nuts making sure that joint seam is flush all around.
5. Thread a locknut onto pendant and screw pendant into Flat Strap.
   Mount another Pendant, locknut and Flat Strap to Support Bracket at the opposite end of the abutting fixture and lift this assembly up and mount to ceiling.
   Level fixture up or down by threading stems or cable studs into Flat Straps.
   Level fixture/connector horizontally by loosening flat strap machine screws and sliding straps from side to side.
6. Mount another fixture to each leg(s) of connector per steps 4 & 5 above.
7. Wire feed may be brought into abutting fixtures thru the 7/8" holes in the end headers.
8. Mount Joint Covers over each Fixture/Connector joint with (2) sheet metal screws threaded into holes in Support Brackets.
9. Replace Wireway Covers and clean exterior sufaces with a general window cleaner.

LITECONTROL 100 HAWKS AVENUE - PO BOX 100 - HANSON MA 02341, 781-294-0100